X-Link Interface

Technical Specification

Nov 29, 2019

This paper describes the technical part of the Mimer X-Link Interface.

Please also refer to the web page: www.lse.se/x-link

1 Table of Contents

1 Table of Contents 2
2 Mimer X-Link 3
3 The X-Link Interface 4
4 Specifications 5
4.1 Mechanical 5
4.2 Audio 5
4.3 I/O´s 5

2 Mimer X-Link

The Mimer X-Link Interface patches together almost any two types of radios so that radio users in two different types of radio systems can talk to each other.

The interface has an embedded microprocessor with purpose designed firmware that handles all communication between the radios.

The audio is handled in analogue mode and the gain can be adjusted to fit almost all radio types.

A complete system consists of the Interface box and a cable kit that fits the two radios.

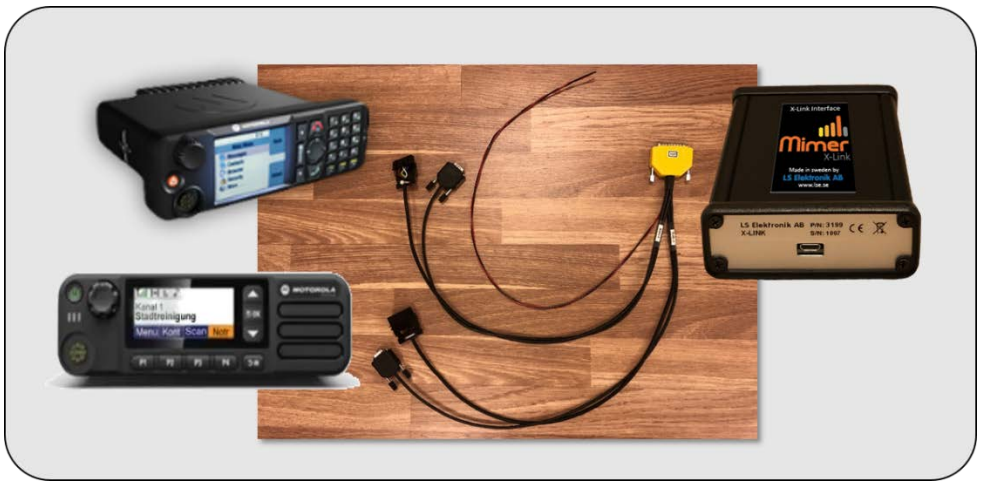

Needed parts for a setup: Interface, cable kit and radios

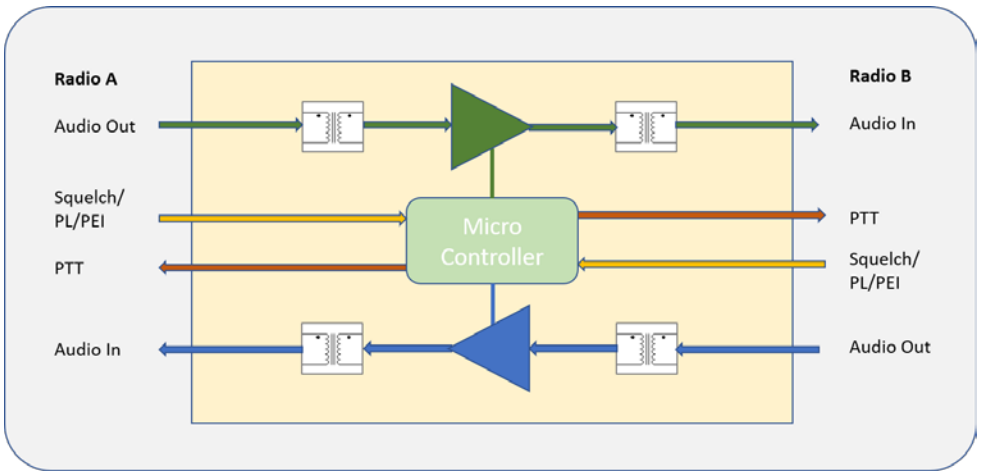

Simplified system drawing of the interface

3 The X-Link Interface

The purpose of the X-Link Interface is to be a patch between two radios, thereby bridging two radio systems together.

The X-Link Interface has a very flexible design so the audio and the I/O signals can be configured to fit almost any radio on the market, both Mobile Radios and Base Stations. Also other sources of audio can be connected for example PA-systems.

The X-Link Interface has connections for audio input and output, I/O control signals like Squelch and PTT and also data signals through serial data (for example PEI) and USB.

The X-Link Interface is set up using a small Windows utility, described in a separate manual. In the setup utility all audio levels in/out are set and the way the interface shall detect squelch and do PTT are defined.

The X-Link Interface runs on 12VDC just as most radios and is therefore easy to power from the same source as the radio, and to feed with backup power. If power is lost, the X-Link Interface will restart itself in a matter of seconds when the power comes back.

A Tetra radio cross patched together with an analogue radio

The X-Link Interface has no delays on the audio path since all audio through the interface is analogue. Delays may on the other hand be encountered on the timing that each of the radios have in their call detect and call setup. This is specific to each radio type and to the radio systems they work in.

4 Specifications

Specifications for the standard version of the Mimer X-Link Interface.

4.1 Mechanical

Size	130 x 80 x 30 mm
Weight	230g
Power supply	Nom: 12V / 250mA Min: 8V Max: 18V
Temp range	-10 - +50 °C
Connectors	*D-sub for audio, power, I/O and data*

4.2 Audio

2 x Input (from radio speaker)	Max: 10Vpp (3.5Vrms)
Input impedance	AC coupled transformer: 2200 ohm. (Optional 600 ohm)
Adjustable Gain	-35dB … +25dB
2 x Output (to radio microphone)	Max: 4.0Vpp (1.4Vrms) @ RL: 600 ohm Max: 7.8Vpp (2.7Vrms) @ RL: Hi Z
Output impedance	AC coupled transformer: 560 ohm. (Optional 30dB attenuator)

4.3 I/O´s

2 inputs	On= 2.5-30V / Off= 0-0.8V, 47kohm impedance to ground Optional 5.6kohm pull-up to +5V or +12V
2 open collector outputs	Max 30V / Max 50mA.
Data I/O for radio control	RS232, TTL, USB and other manufacturer-specific protocols
Programming port	USB micro

Proudly made in Sweden by

LS Elektronik AB

www.lse.se

mimer@softradio.se